THIS DRAWING IS UNPUBLISHED. RELEASED FOR PUBLICATION -,- .
© COPYRIGHT - BY TYCO ELECTRONICS CORPORATION. ALL RIGHTS RESERVED.

LOC	DIST
CM	00

REVISIONS

P	LTR	DESCRIPTION	DATE	DWN	APVD
	G	EC 0G3B 0213 05	19AUG05	BSV	RCJ

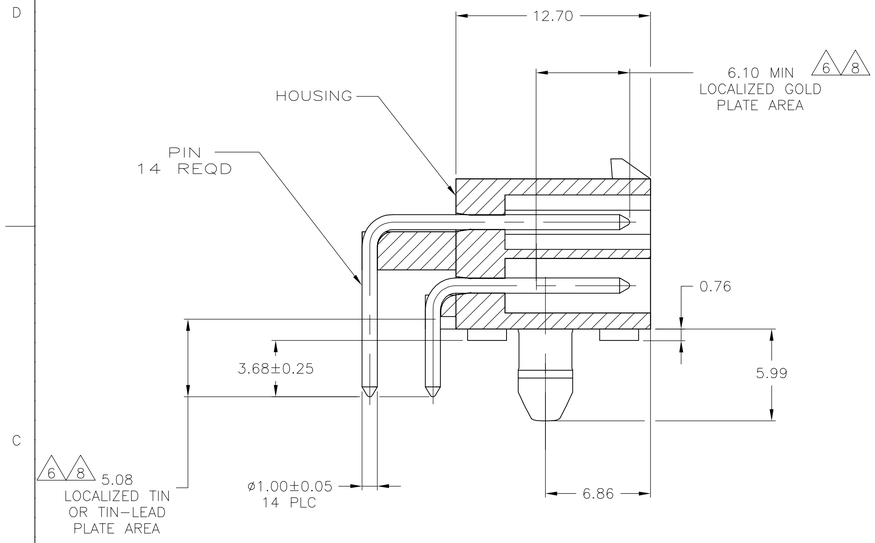

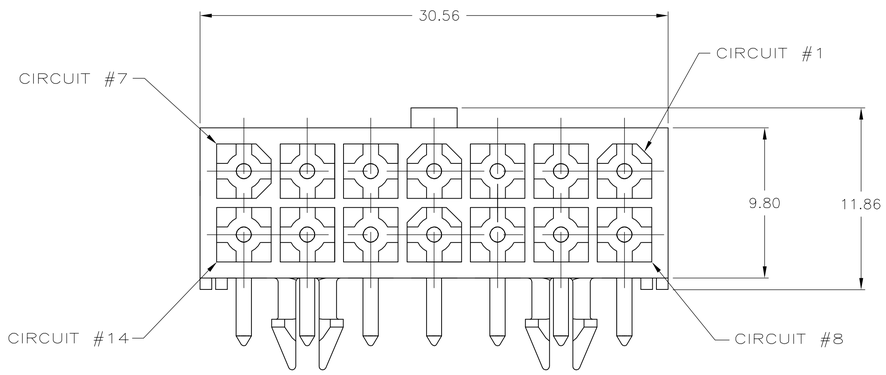

1. PINS TO COMPLY WITH AMP SOLDERABILITY SPEC 109–11–3.
2. MATES WITH PLUG P/N 770582–1.
3. COORDINATE DIMENSION APPLIES FROM CENTER OF ACTUAL FEATURE.
4. RECOMMENDED FOR EDGE MOUNTING.
5. 0.00381 MIN MATTE TIN LEAD OVER 0.00127 MIN NICKEL ENTIRE LENGTH OF PIN.
6. 0.00076 MIN GOLD PLATE IN THE LOCALIZED PLATE AREA, 0.00381 MIN MATTE TIN LEAD IN THE LOCALIZED PLATE AREA, BOTH OVER 0.00127 MIN NICKEL.
7. 0.00381 MIN MATTE TIN OVER 0.00127 MIN NICKEL ENTIRE LENGTH OF PIN.
8. 0.00076 MIN GOLD PLATE IN THE LOCALIZED GOLD PLATE AREA, 0.00381 MIN MATTE TIN IN THE LOCALIZED TIN PLATE AREA, BOTH OVER 0.00127 MIN NICKEL.

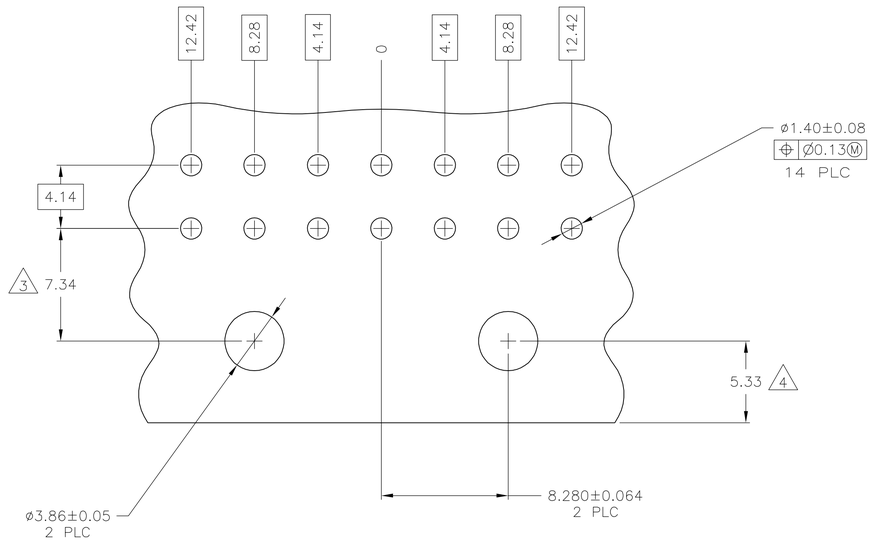

RECOMMENDED MOUNTING HOLE PATTERN
FOR 1.57 THICK P.C. BOARD

3.86	.152		
3.68	.145	30.56	1.203
1.57	.062	12.70	.500
1.40	.055	12.42	.489
1.00	.039	9.80	.386
0.76	.030	8.280	.3260
0.25	.010	8.28	.326
0.13	.005	7.34	.289
0.08	.003	6.86	.270
0.064	.0025	6.10	.240
0.05	.002	5.99	.236
0.00381	.000150	5.33	.210
0.00127	.000050	5.08	.200
0.00076	.000030	4.14	.163
MM	IN	MM	IN

CONVERSION TABLE

MATERIAL (PIN)	FINISH	MATERIAL (HOUSING)	COLOR	PART NO.
BRASS	8	NYLON, UL94V–0	WHITE	1–770973–1
BRASS	7	NYLON, UL94V–0	WHITE	1–770973–0
BRASS	6	NYLON, UL94V–0	WHITE	770973–2
BRASS	5	NYLON, UL94V–0	WHITE	770973–1

THIS DRAWING IS A CONTROLLED DOCUMENT.

DIMENSIONS: mm

TOLERANCES UNLESS OTHERWISE SPECIFIED:
0 PLC ± –
1 PLC ± –
2 PLC ± –
3 PLC ± 0.13
4 PLC ± –
ANGLES ± –

MATERIAL: SEE TABLE
FINISH: SEE TABLE

METRIC

DWN S. CARPENTER 24JUL03
CHK C. JONES 24JUL03
APVD C. JONES 24JUL03
PRODUCT SPEC —
APPLICATION SPEC —
WEIGHT —

tyco Electronics
Tyco Electronics Corporation
Harrisburg, PA 17105–3608

NAME: HEADER ASSEMBLY, RIGHT ANGLE, WITH SHORT PEG, 14 CIRCUIT, MINI UNIVERSAL MATE–N–LOK(TM)

SIZE	CAGE CODE	DRAWING NO	RESTRICTED TO
A1	00779	C–770973	—

CUSTOMER DRAWING | SCALE 5:1 | SHEET 1 OF 1 | REV G

AMP 4805 REV 31MAR2000